ID Number	Code	Description	Pcs
32	M352-002	Check valve CV15-FR with flow regulator 9.0 l/min	1
31	CW072-002	Handshower kit	1
30	CW072-02	Flange for handshower	1
29	M352-00	Handshower	1
28	CW072-004	Filter - check valve tap	2
27	CW072-003	Flesible hose G1/2"-G1/2" DN13 L 400 mm	2
26	CW033-002	Body lateral	2
25	CW033-003	Installation kit for lateral washbasin stand	2
24	CW033-005	1/2" Ceramics headwork 90°	2
23	CB005-16	Wall flange	2
22	CW033-01	Locking nut	2
21	CW033-03	Handle cold	1
20	CW033-004	Flexible hose M10x1-G1/2" L 500 mm	1
19	CW033-006	Connection flexible/spout	1
18	AR073-008	Flexible pipe	1
17	CW072-001	Flexible hose M10x1 - G1/2" Male	1
16	CW023-001	Fixing kit for mixer/diverter	1
15	CW023-003	Mixer/diverter body	1
14	CW023-04	O.Ring 34,59x2.62	3
13	CW023-03	Flange for mixer/diverter	1
12	CB029-001	2-Ways diverter cartridge without shut-off	1
11	CB029-13	Locking nut for diverter cartridge	1
10	CW023-01	Cover	3
9	CW003-07	Teflon ring	3
8	CW003-02	Handle pin	3
7	CW003-06	Insert	3
6	CW003-10	Screw M4x20	3
5	CW072-01	Handle for diverter	1
4	CW003-08	Dowel M4x5	3
3	CW003-01	Handle	1
2	AR073-007	Flexible pipe M10x1-G1/2" L=500 mm	1
1	CB031-05	Gasket	4

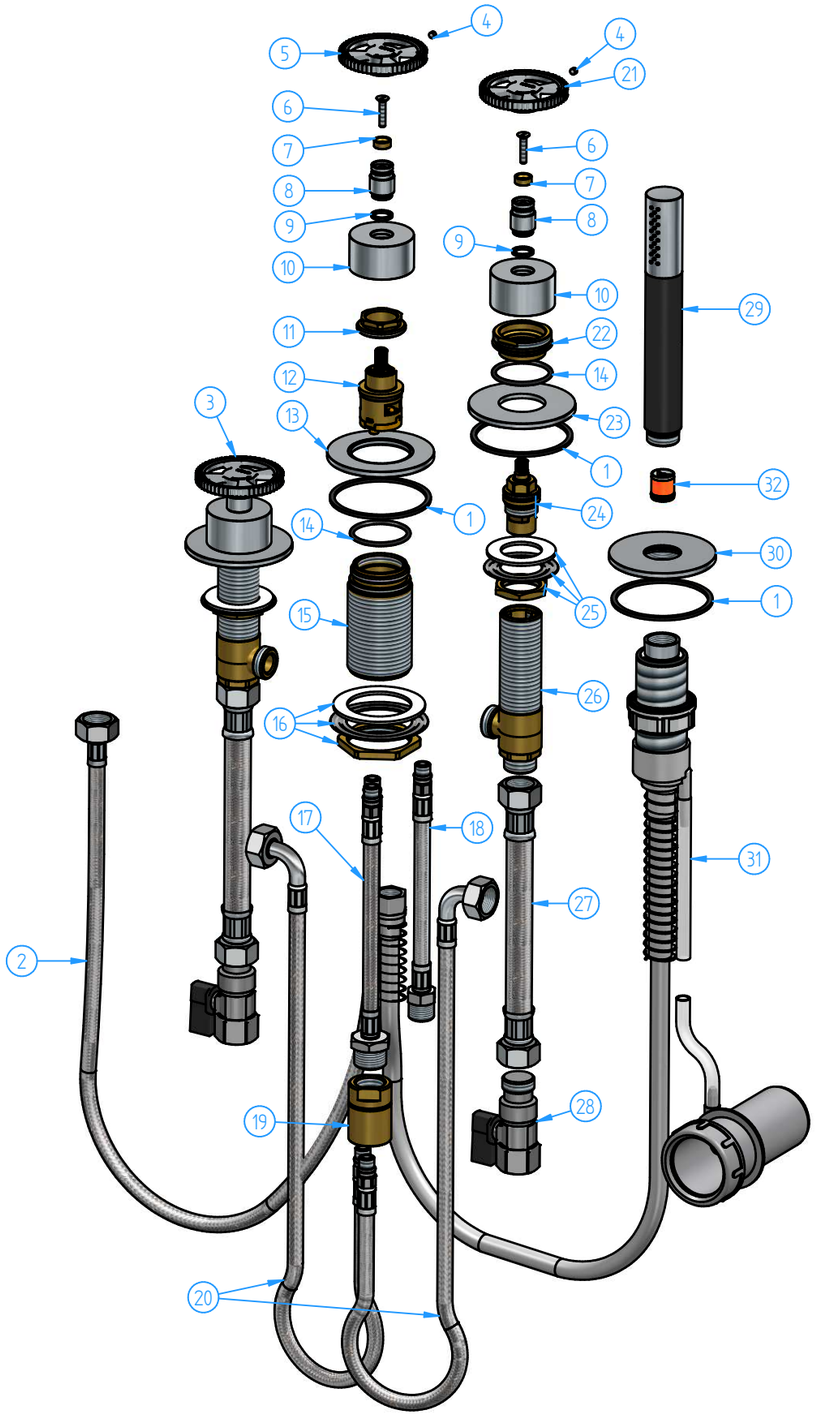

N°	REVIEW	Date

Sheet **1 of 3**

Scale 1:4

Description

Deck-mounted bathtub set, without spout

Material

Weight 0 kg

Code ***CW074-00***

Date of issue 23/04/2019

Chamfers not quoted 0.5x45°

Finishing: SM Grinding | LU Polishing | CR GN

hotbath italian bathroomware

This drawing is property reserved of Hotbath Srl.
Without express authorization, the copying, distribution and utilization of this document as well as the communication to others is prohibited